Installation Instructions
TJ Premium Window Kit

Vehicle Application

- **Jeep Wrangler / TJ**
  1997 – 2002
  Part Number: 58122

www.Bestop.com - We're here to help! Visit our web site and click on "Ask a Question". Click here for more Jeep Accessories by Bestop.

INSTALLATION TIME	SKILL LEVEL
1/2 Hour	1 2 3 4 2 - Moderately Easy

TOOLS

Safety Glasses

CAUTION Safety glasses should be worn at all times while installing this product.

Installation Tips

Before you begin installing this assembly, read all instructions thoroughly.

For a smooth fit:
For ease in installation, the product should be installed at temperatures above 72° F. Below this temperature, the fabric may contract an inch or more, making it difficult to fit to the vehicle. It is normal for fabric to contract and wrinkle when stored in the shipping carton. Within a few days after the installation, the fabric will relax and the wrinkles will disappear.

WARNING This product is designed primarily to enhance the appearance of the vehicle and to shield the occupants from ordinary weather conditions. Do not rely in any way on the components of this product to contain occupants within the vehicle, or to protect against injury or death in the event of an accident. This product will not protect the occupants from falling objects. Never operate the vehicle in excess of manufacturer's specifications.

WEAR SEAT BELTS AT ALL TIMES

Read and follow, precisely, all installation instructions provided when installing product. Failure to do so may result in a poor fit and could place occupants of the vehicle in a potentially dangerous situation.

Premium Window Kit – Installation Instructions

Parts List

Quarter Widow, Right	Qty - 1
Quarter Widow, Left	Qty - 1
Rear Window	Qty - 1

1 Attach Quarter Panel Zippers

Locate the left and right Quarter Panels and orient them with the zipper along the top and rear of the panel. Start the zipper at the front top corner of the Quarter Panel, next to the door. Hold the end of the zipper and close the zipper slider 10" - 12" along the top of the panel.

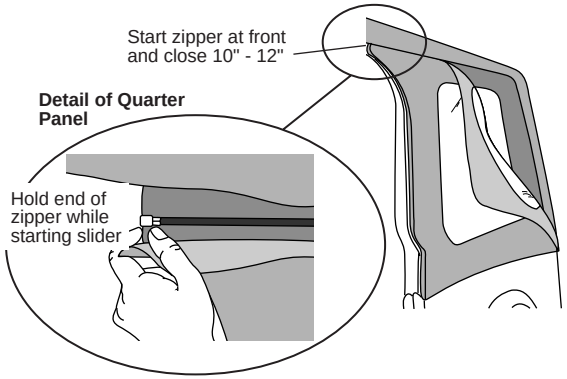

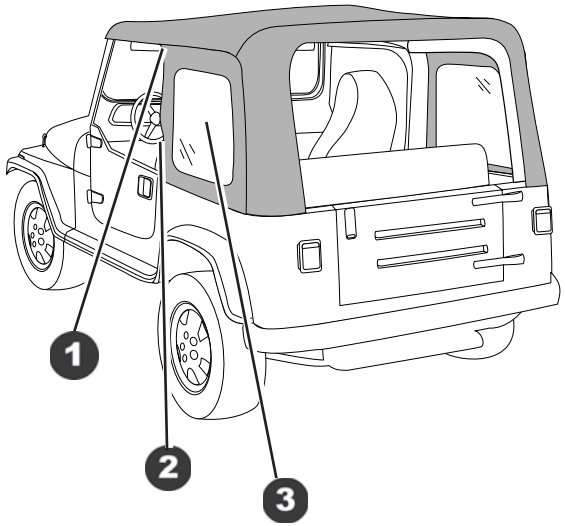

2 Secure Front of Quarter Panels

Roll the plastic along the front of the Quarter Panel into the channel of the Door Surround on the vehicle.

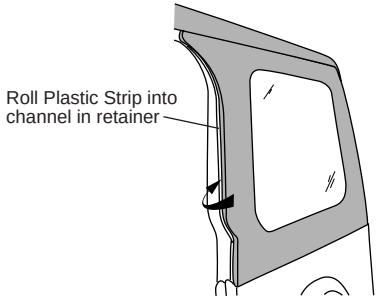

3 Secure Quarter Panels

Close the zippers on the Quarter Panels the rest of the way to the lower rear corner of the panel.

Start at the rear and roll the plastic along the bottom of the panel into the retainer on the vehicle. Then fasten the hook and loop strips along the top and rear of the panel to the top.

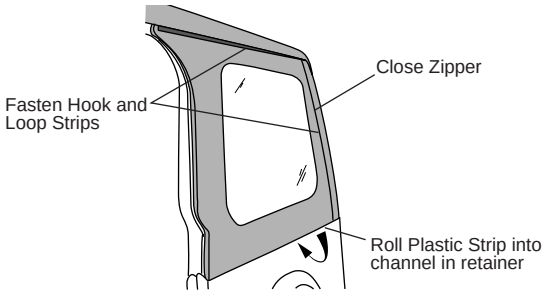

Premium Window Kit – Installation Instructions

4 Install Tailgate Bar on Rear Window

Remove the Rear Window from the box and lay it flat with the backing side up. Locate the Tailgate Bar set aside in Step One. The bar has a “C” shaped channel, when viewed from the end. Orient the bar with the round seal down and slide the “C” channel on the retainer onto the tubed strip sewn to the backing side of the Rear Window.

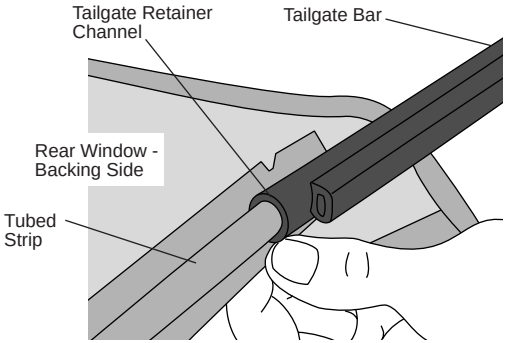

5 Install Tailgate Bar on Vehicle

Insert the Tailgate Bar into the mounts on each side of the tailgate opening with the vinyl side of the Rear Window toward the outside of the vehicle.

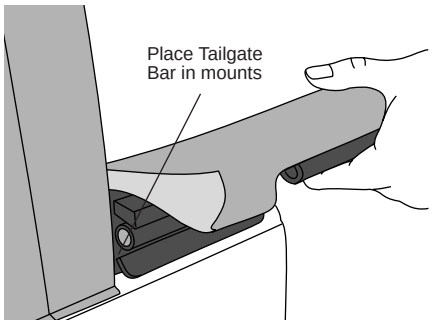

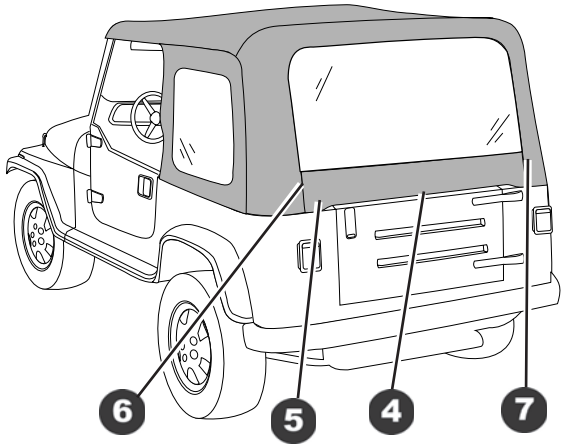

7 Secure Rear Window Flaps

Inside the top locate the flaps sewn to the top on each side of the rear window opening. Pull the flaps over to cover the zipper and tuck them in.

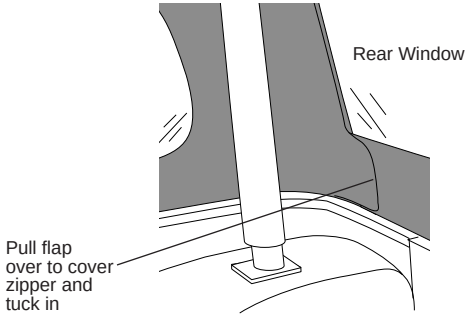

View from inside top

6 Secure Rear Window Zippers

To start the zipper, pull the two sliders as far down as possible on the driver’s side of the window in order to catch the sliders to the pin.

Once the zipper is caught, start the top slider 1/2". Then hold up the top of the window with one hand and close the zipper with the other. The zipper is sandwiched between layers of fabric in the corners so be careful not to catch extra fabric in the zipper. Close the zipper.

Make sure that the Tailgate Bar is centered and is securely in the mounts. Then tuck the flaps on the Rear Window under the top fabric.

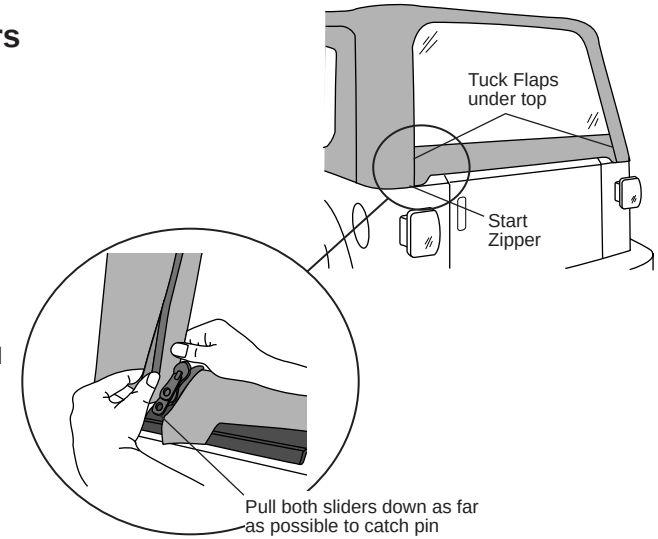

WARNING When operating the vehicle without the Quarter Windows, the Rear Window should be rolled up and secured with the elastic garters for proper ventilation.

8 To Fold the Top Down Remove Quarter Panels and Rear Window

Remove the Quarter Panels and the Rear Window. To remove the Quarter Windows, unzip the rear and top zippers. Release the plastic strip from the retainer. Release the Hook and Loop Fasteners from around the Vertical Retainer.

To roll up the Rear Window, remove the Tailgate Bar and open the zippers on each side of the window to the top. Start at the bottom and roll the window to the inside. Avoid wrinkles in the fabric and window. Secure it in place with the elastic garters inside of the top.

9 To Fold the Top Down Collapse Top

Release the front of the top from the windshield. Raise the front of the deck and collapse the rear bows, tucking the two plastic strips above the door openings and the stay pad on the rear bow inside of the bows. Wrap the fabric a round the bows, then tuck the rear legs of the top under the bows.

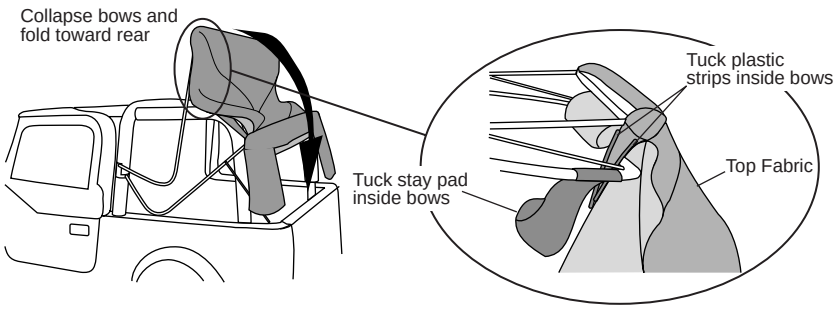

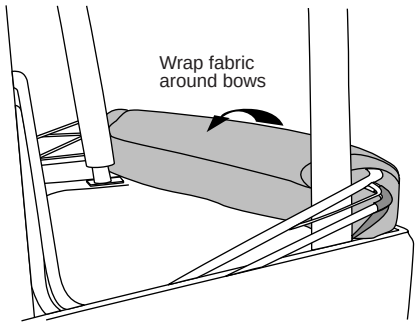

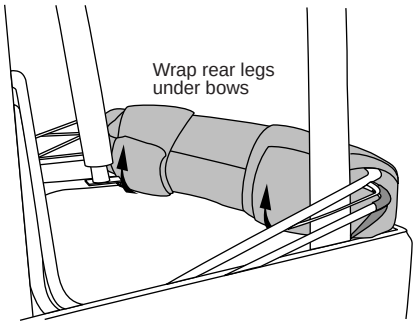

Premium Window Kit – Installation Instructions

Care and Maintenance of your New Product

Your product is made of the finest materials available. To keep it looking new and for the maximum possible wear, it will need periodic cleaning and maintenance.

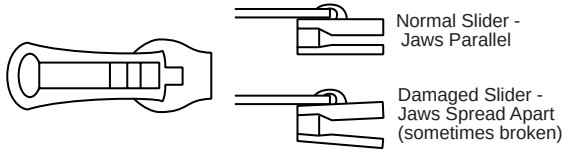

Washing: The fabric should be washed often using soap, warm water and a soft bristle brush. Rinse with clear water to remove all traces of soap.

Zippers: Keeping the zipper cleaned and lubricated with a silicone lubricant will help prevent damage and keep the zippers in a smooth working condition. If a zipper opens behind the slider, the slider may have been spread apart. This problem can usually be repaired by using an ordinary pair of pliers to bring the sides back into parallel. Return slider to the end of the zipper in the normal Open position. Squeeze lightly at first and test the zipper. If the zipper continues to remain open squeeze more firmly with the pliers and try the zipper again. Repeat this procedure until the zipper operates correctly.

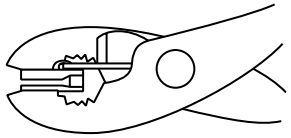

Water: In the event of seeping through the seams, 3M Scotchgard® may be applied on the inside of the seams to stop the seepage. Rips in the fabric may be repaired with Bondex® iron on patches. Iron the patches to the Inside of the top, carefully following the Bondex® instructions.

LIMITED WARRANTY

We warrant our product to be free from defects in material and workmanship, for the terms specified below, provided there has been normal use and proper maintenance. This warranty applies to the original purchaser only. All remedies under this warranty are limited to the repair or replacement of any item or items found by the factory to be defective within the time period specified. If you have a warranty claim, first you must call our factory at the number below for instructions. You must retain proof of purchase and submit a copy with any items returned for warranty work. Upon completion of warranty work, if any, we will return the repaired or replaced item or items to you freight prepaid. Damage to our products caused by accidents, fire, vandalism, negligence, misinstallation, misuse, Acts of God, or by defective parts not manufactured by us, is not covered under this warranty.

THE WARRANTY TIME PERIOD IS AS FOLLOWS FOR REPLACE-A-TOP™, SAILCLOTH REPLACE-A-TOP™, SUPERTOP®, SUPERTOP® REPLACEMENT SKINS, SUNRIDER®, AND TIGERTOP®: TWO YEARS FROM DATE OF PURCHASE.

THE WARRANTY TIME PERIOD IS AS FOLLOWS FOR ALL OTHER “SOFT GOODS” MANUFACTURED BY OUR COMPANY (USING PRIMARILY VINYLS, PLASTICS, AND/OR FOAM): ONE YEAR FROM DATE OF PURCHASE.

THE WARRANTY TIME PERIOD IS AS FOLLOWS FOR ALL OTHER “HARD GOODS” MANUFACTURED BY OUR COMPANY (USING PRIMARILY METALS, PLASTICS, AND/OR FIBERGLASS): ONE YEAR FROM DATE OF PURCHASE.

ANY IMPLIED WARRANTIES OF MERCHANTABILITY AND/OR FITNESS FOR A PARTICULAR PURPOSE CREATED HEREBY ARE LIMITED IN DURATION TO THE SAME DURATION AND SCOPE AS THE EXPRESS WRITTEN WARRANTY. OUR COMPANY SHALL NOT BE LIABLE FOR ANY INCIDENTAL OR CONSEQUENTIAL DAMAGE.

Some states do not allow limitations on how long an implied warranty lasts, or the exclusion or limitation of incidental or consequential damages, so the above limitations or exclusions may not apply to you. This warranty gives you specific legal rights, and you may also have other rights which vary from state to state.

For further information or request for warranty work, please contact:
Bestop Inc., Customer Service
Toll-Free: (800)845-3567
Main: (303)465-1755
E-mail: csbestop@Bestop.com
Website: www.Bestop.com