# INSTALLATION INSTRUCTIONS FOR ORIGINAL KIT #295150 ON 1986 – 1995 JEEP WRANGLER

## NOTICE

**Ramsey kits are designed for use with Ramsey Winches only.**
**Use or sales of kits for other winches or applications voids warranty.**

## ⚠ WARNING

Ramsey offers mounting kits and winches for various vehicles. In crash tests on a limited number of automotive manufacturer's vehicles, winches/mounting kits, which have been properly mounted, have not interfered with air bag operation.

The user/customer, or their installer, must verify that the mounting kit does not interfere with the factory air bag sensors, which must not be relocated or modified in any way.

The user/customer should follow the vehicle manufacturer's recommendations and those of a qualified mechanic to determine if the winch/mounting kit might interfere with the air bag operation. The user/customer should then determine the suitability of a winch/mounting kit on a particular vehicle.

**PLEASE BE ADVISED THAT THE VEHICLE'S AIR BAG SYSTEM MAY NOT OPERATE PROPERLY IF THE WINCH/MOUNTING KIT IS NOT MOUNTED IN COMPLIANCE WITH THE VEHICLE MANUFACTURER'S RECOMMENDATIONS.**

DO NOT ATTACH TOW HOOK TO ANY PART OF MOUNTING KIT UNLESS INSTRUCTED TO DO SO.

DO NOT SUBSTITUTE ATTACHING HARDWARE ITEMS (BOLTS, NUTS, OR WASHERS).

**READ AND UNDERSTAND WINCH OWNER'S MANUAL BEFORE INSTALLATION AND OPERATION OF WINCH. SEE WARNING AND CAUTION.**

## IMPORTANT NOTES!

1. RIGHT AND LEFT HAND DIRECTIONS AS IF SEATED BEHIND STEERING WHEEL.
2. ALL FASTENING HARDWARE MUST BE LOOSELY ASSEMBLED UNTIL DIRECTED TO TIGHTEN.

**RAMSEY WINCH COMPANY**
**P.O. BOX 581510**
**TULSA, OKLAHOMA 74158**

KI-913218-0301-I

# STEP 1

Mount fairlead to channel (item #6). Use (2) 3/8-16NC x 1-1/4 Lg. capscrews, lockwashers and nuts (furnished with winch). **TIGHTEN HARDWARE TO PROPER TORQUE VALUE**. (See Torque Value Chart).

Insert (2) grommets (item #21) into 3/4 inch dia. holes in channel (item #6), as indicated below. Place red and black cables, attached to winch, through grommets in channel. Grommets not required with PRO-8000/PRO-9000 winches. Refer to PRO-8000/PRO-9000 Owners Manual and follow ELECTRICAL INSTALLATION directions.

Attach winch assembly to channel (item #6). Use (4) 3/8-16NC x 1-1/4 Lg. Hx. Hd. capscrews with flatwashers, lockwashers and nuts (furnished with winch). **NOTE:** Flatwashers and nuts go inside of the pockets of winch mounting feet. **TIGHTEN HARDWARE TO PROPER TORQUE VALUE.** (See Torque Value Chart).

IF MOUNTING RW-4000 REFER TO WINCH OWNER'S MANUAL FOR WINCH INSTALLATION INSTRUCTIONS AND STEP 4, PAGE 5 FOR ELECTRICAL CONNECTIONS.

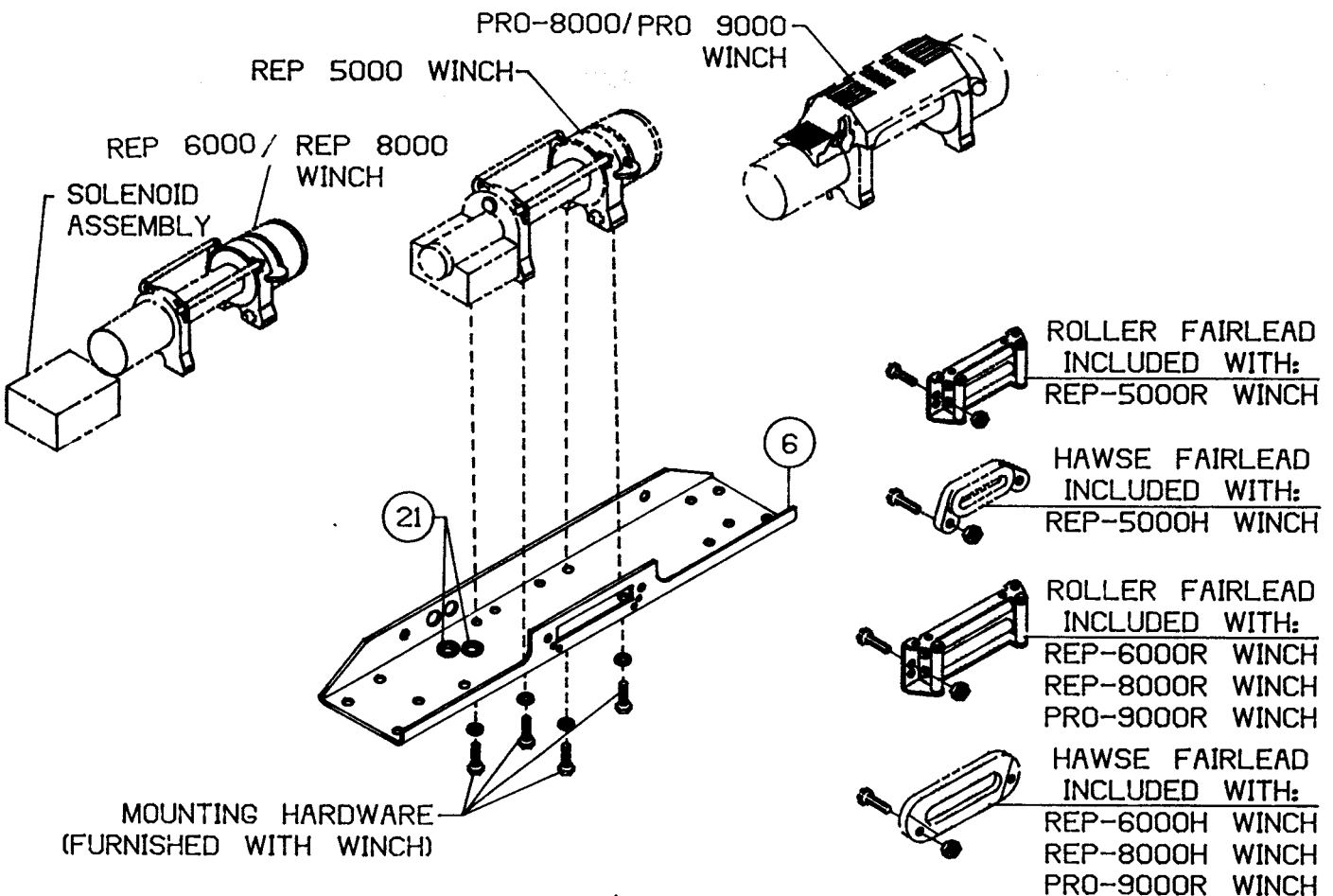

# STEP 2

Remove and discard vehicle tow-hooks from top of vehicle frame, if present. Remove plastic panel from top of vehicle frame and (2) bolts used to mount top flange of bumper to vehicle frame. This will expose captive nuts, in top of vehicle frame, to be used in mounting kit to vehicle frame.

**WHEN MOUNTING PRO-8000/PRO-9000 WINCHES** Attach solenoid assembly to solenoid mounting bracket (item #7) using (2) 1/4-20NC x 1/2" lg. capscrews with lockwashers (furnished with winch). It will be necessary to temporarily remove brake line support brackets from vehicle. This allows needed clearance to feed solenoid assembly through opening between sheetmetal and grille.

Attach solenoid bracket (item #7) to vehicle sheetmetal at existing holes in vehicle sheetmetal. See VIEW A-A. Use (2) 1/4-20NC x 3/4 Lg. Hx. Hd. capscrews with washers and nuts, as shown below. NOTE: Flatwasher (item #16) is required at larger of (2) existing holes **TIGHTEN HARDWARE TO PROPER TORQUE VALUE**. (See Torque Value Chart).

Attach green wire assembly (item #2) to green wire in loom of solenoid assembly and green wire of receptacle in winch cover. Re-install brake line support bracket.

Refer to Owner's Manual for ELECTRICAL CONNECTIONS.

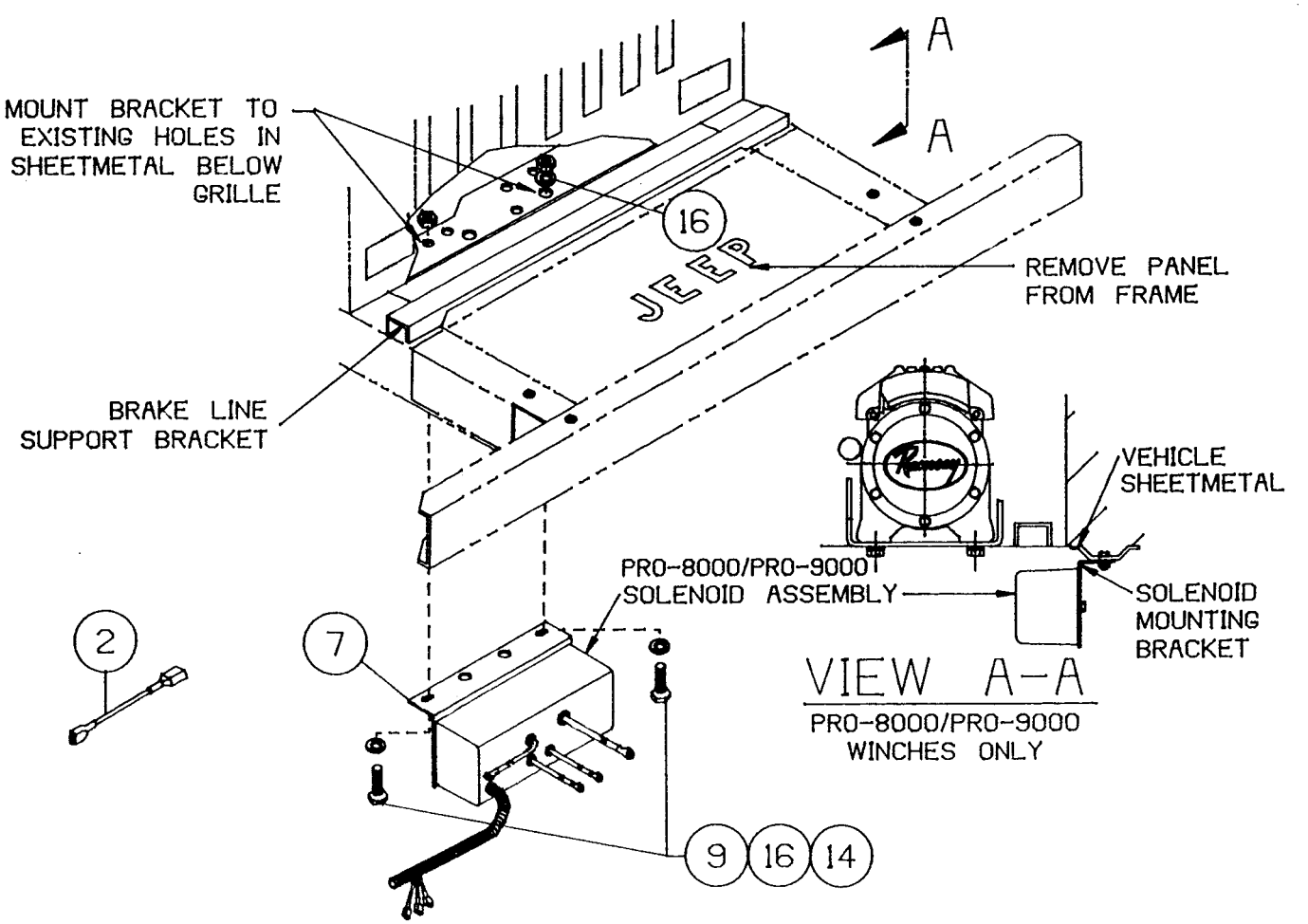

**WHEN MOUNTING REP-6000/REP-8000 SOLENOIDS TO CHANNEL,** remove solenoid cover from solenoid mounting bracket by unscrewing (3) cover mounting screws. See FIGURE 1. Remove from solenoid bracket the (3) 1/4-20NC x 1-1/4 Lg. capscrews, lockwashers, nuts and spacers. Re-use (3) existing spacers with (1) spacer (item #19). Secure spacers to channel (item #6) using (2) 1/4-20NC x 1-3/4 Lg. Hx. Hd. capscrews with existing lockwashers and nuts, as shown. **TIGHTEN TO PROPER TORQUE VALUE.** (See Torque Value Chart). **DO NOT MOUNT SOLENOIDS AT THIS TIME.**

Place spacers (items #3 & #4) onto vehicle frame at captive nuts in frame. Set channel (item #6), with winch attached onto spacers and secure to vehicle frame. Use (2) 1/2-13NC x 2 Lg. capscrews with lockwashers thru channel, spacers (item #3) and into captive nut at front of vehicle frame. Use (2) 1/2-13NC x 1-3/4 Lg. capscrews with lockwashers, thru channel, spacers (item #4) and into remaining captive nut in top of frame. **TIGHTEN HARDWARE TO PROPER TORQUE VALUE.** (See Torque Value Chart).

**REP-6000/REP-8000 SOLENOID MOUNTING AND RE-LOCATION:**
Thread setscrew (item #13) into nutsert of solenoid mounting bracket, See FIGURE 1. Place solenoid mounting bracket on top of spacers (item #19) and capscrews (item #9). Use nuts furnished with solenoid assembly to secure bracket to channel. Set cover over setscrew (item #13) and mounting bracket. Secure cover to mounting channel using (2) cover mounting screws.

**WHEN MOUNTING THE EARLIER MODEL "6000" WINCH WITH SOLENOID ASSEMBLY UNDER THE MOTOR,** see last page.

**NOTE:** When mounting Jeep grille guards to mounting channel, re-location of solenoid assembly is necessary. Remove solenoid cables from motor terminals. Attach (1) wire assembly (item #1) to each solenoid cable using (1) 5/16-18NC x 1/2 Lg. capscrew with lockwasher and nut. Tighten hardware securely.

Slip (1) cover-shrink tube (item #5) over each wire assembly and cover capscrew and terminals. Heat cover with match or heat gun until cover shrinks tightly around capscrew and terminals. **REPEAT PROCEDURE WITH REMAINING (2) COVERS.**

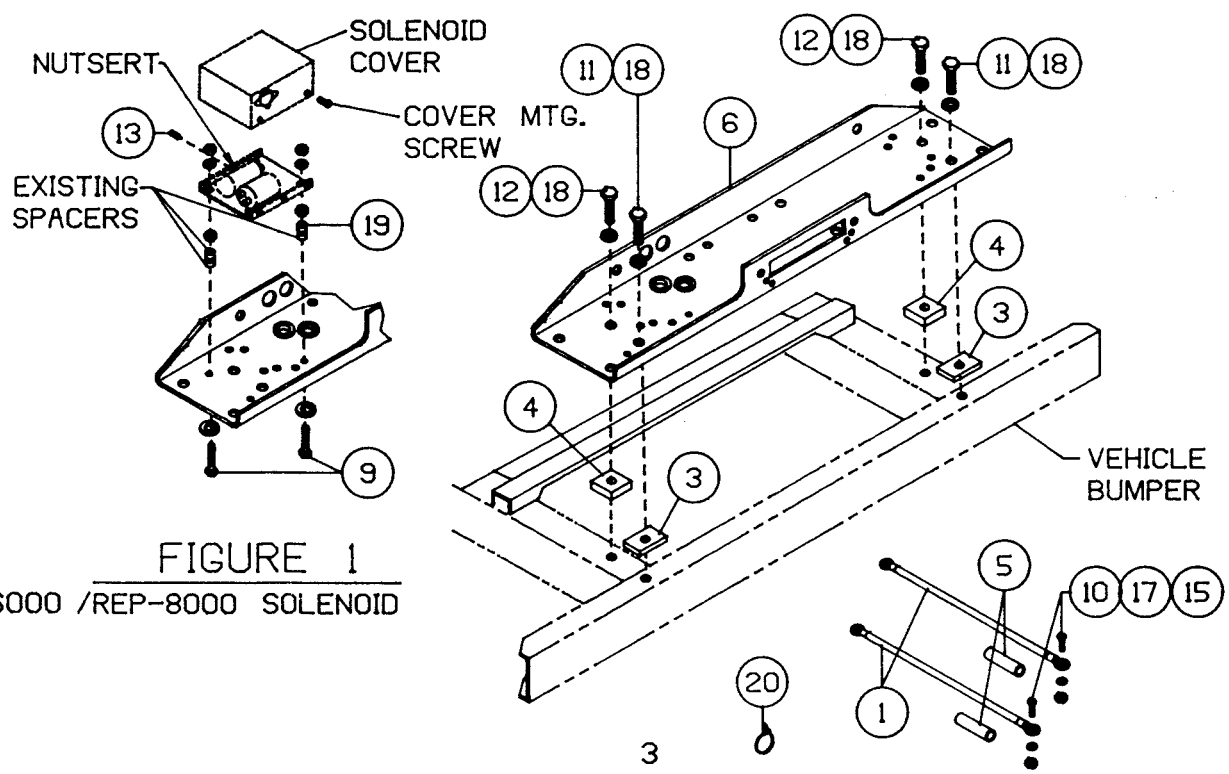


FIGURE 1
REP 6000 /REP-8000 SOLENOID

Place solenoid assembly under hood and route extended solenoid wire assembly thru grille, grommets in channel and attach wires to motor terminals. Tighten terminals securely.

Set solenoid assembly onto R.H. wheel well. Mark location of (3) solenoid mounting studs on wheel well. Drill (3) 5/16 dia. holes at marked location. Mount solenoid assembly to wheel well using nuts and lockwashers furnished with solenoid assembly. Tighten nuts securely.

Route red and black cables up to battery. Connect red cable to positive (+) terminal of battery and black cable to negative (-) battery terminal. Use (2) ties (item #20) to securely hold cables in place under hood (location at installer's discretion). **BE SURE BATTERY CABLES ARE NOT DRAWN TAUT ACROSS ANY SURFACE OR IN THE WAY OF FAN BLADES WHICH COULD POSSIBLY DAMAGE THEM.**

Plug remote switch (provided with winch) into female receptacle of winch. Run winch forward and reverse to check connections. Snap appropriate plastic "IN" or "OUT" disc into proper thumb button cavity, after determining winch operating directions. **DO NOT LEAVE REMOTE SWITCH PLUGGED IN WHEN WINCH IS NOT IN USE.**

Place end of drum cable through fairlead and attach cable hook with clevis pin and cotter pin (furnished with winch).

**REFER TO WINCH OWNER'S MANUAL FOR SAFE OPERATIONS.**

TORQUE VALUE CHART

| SIZE | TORQUE FT./LB. | NM. |
|---|---|---|
| 1/4-20NC | 5 | 6.7 |
| 5/16-18NC | 12 | 16.1 |
| 3/8-16NC | 34 | 46.0 |
| 1/2-13NC | 74 | 100.0 |

PARTS LIST FOR MOUNTING KIT #295150

| ITEM NO. | QTY. | PART NO. | DESCRIPTION |
|---|---|---|---|
| 1 | 2 | 289102 | WIRE ASS'Y.-EXTENSION |
| 2 | 1 | 289122 | WIRE ASS'Y. |
| 3 | 2 | 362246 | SPACER-FRONT |
| 4 | 2 | 362247 | SPACER-REAR |
| 5 | 4 | 395080 | COVER-SHRINK TUBE |
| 6 | 1 | 312508 | CHANNEL |
| 7 | 1 | 408127 | BRACKET-SOLENOID MTG. |
| 8 | 2 | 414038 | CAPSCREW 1/4-20NC x 3/4 LG. Z.P. |
| 9 | 2 | 414054 | CAPSCREW 1/4-20NC x 1-3/4 LG. Z.P. |
| 10 | 2 | 414133 | CAPSCREW 5/16-18NC x 1/2 LG. HX.HD. Z.P. |
| 11 | 2 | 414542 | CAPSCREW 1/2-13NC x 2 LG. HX.HD. GR.5 Z.P. |
| 12 | 2 | 414562 | CAPSCREW 1/2-13NC x 1-3/4 LG. HX.HD. GR.5 Z.P. |
| 13 | 1 | 416002 | SETSCREW |
| 14 | 2 | 418014 | NUT 1/4-20NC HX.REG. Z.P. |
| 15 | 2 | 418022 | NUT 5/16-18NC HX.REG. Z.P. |
| 16 | 3 | 418158 | WASHER 1/4 FLAT |
| 17 | 2 | 418163 | LOCKWASHER 5/16 MED.SECT. Z.P. |
| 18 | 4 | 418218 | LOCKWASHER 1/2 MED.SECT. Z.P. |
| 19 | 1 | 418514 | SPACER |
| 20 | 2 | 440138 | CABLE TIES |
| 21 | 2 | 472017 | GROMMET |
| 22 | 1 | 416232 | CAPSCREW #10-32NF x 1/2 LG. SLOTTED HD. |
| 23 | 1 | 418002 | NUT #10-32NF |
| 24 | 2 | 418140 | FLATWASHER #10 |
| 25 | 1 | 418154 | FLATWASHER 1/4 |

# STEP 4

WHEN MOUNTING RW4000 WINCH, it will be necessary to extend existing winch battery wires. Attach (1) wire assembly (item #1) to the black winch wire using (1) 5/16-18NCx1/2 lg. capscrew (item #10), with lockwasher and nut. Disconnect circuit breaker from red winch battery wire. Attach (1) wire assembly (item #1) to the red battery wire using (1) #10-32NFx1/2 lg. slotted hd. capscrew (item #22) with flatwasher and nut. Tighten hardware securely.

Slip (1) cover-shrink tube (item #5) over each capscrew and wire terminals. Heat shrink tube with match or heat gun until tube shrinks tightly around capscrew and terminals. Repeat step using remaining (2) covers.

Attach circuit breaker to the positive (+) battery terminal, as shown. Use 1/4 flatwasher (item #25) between circuit breaker and nut. Attach wire, extending red winch wire, to circuit breaker. Use existing #10-32NFx1/2 lg. slotted hd. capscrew and nut, with flatwasher (item #24). Attach second wire, extending black winch wire, to negative (-) terminal of battery. Tighten hardware securely.

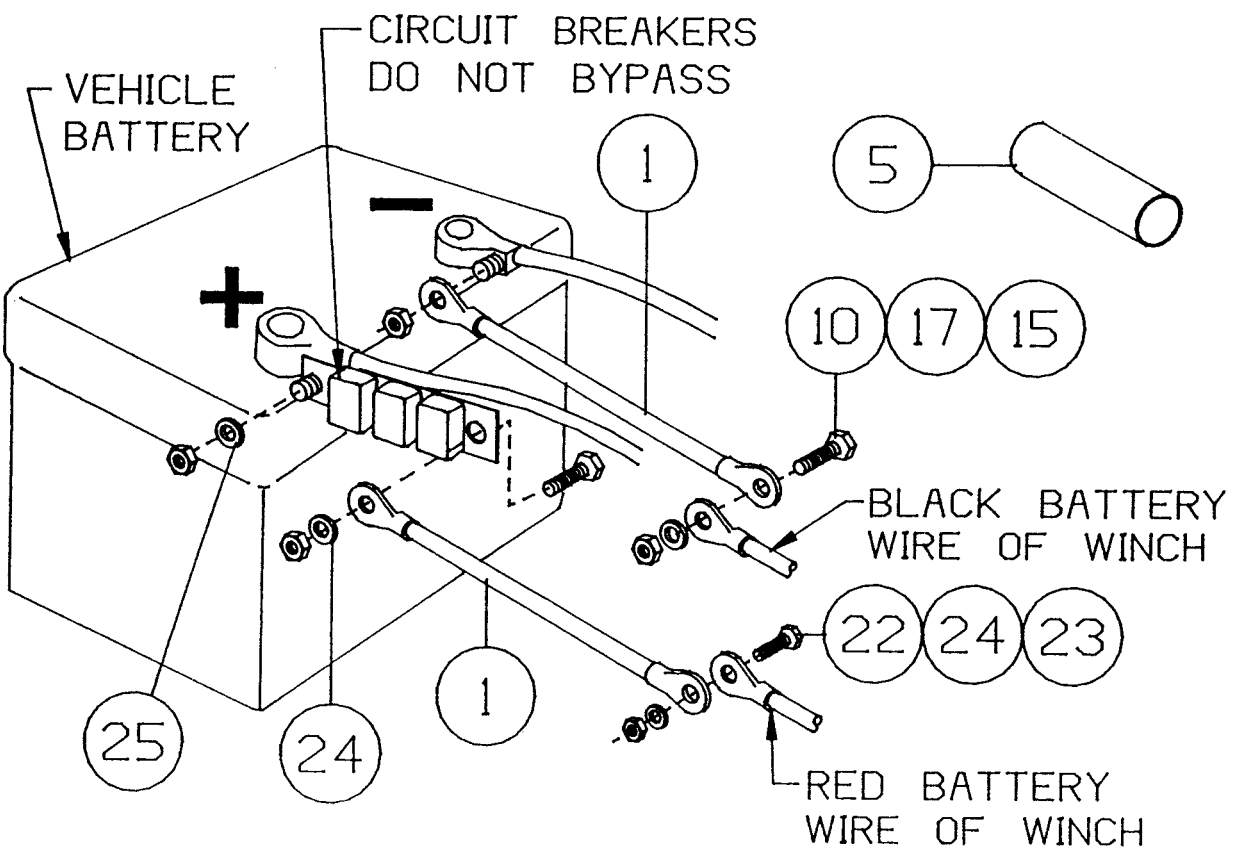

**INSTRUCTIONS FOR MOUNTING AN EARLIER MODEL REP 6000 WINCH (SOLENOID ASSEMBLY UNDER THE MOTOR) TO A RAMSEY BUMPER, GRILLE GUARD, OR HIDDEN / ORIGINAL KIT.**

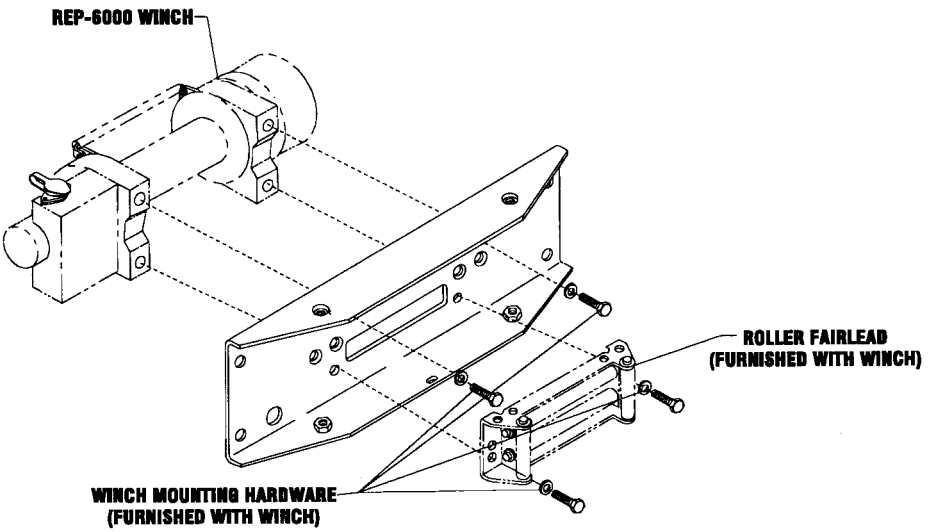


**BUMPER MOUNT**

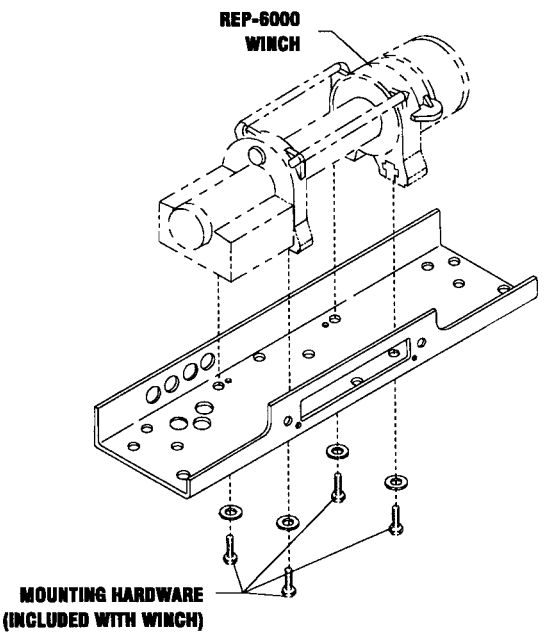


**HIDDEN/ORIGINAL MOUNT**

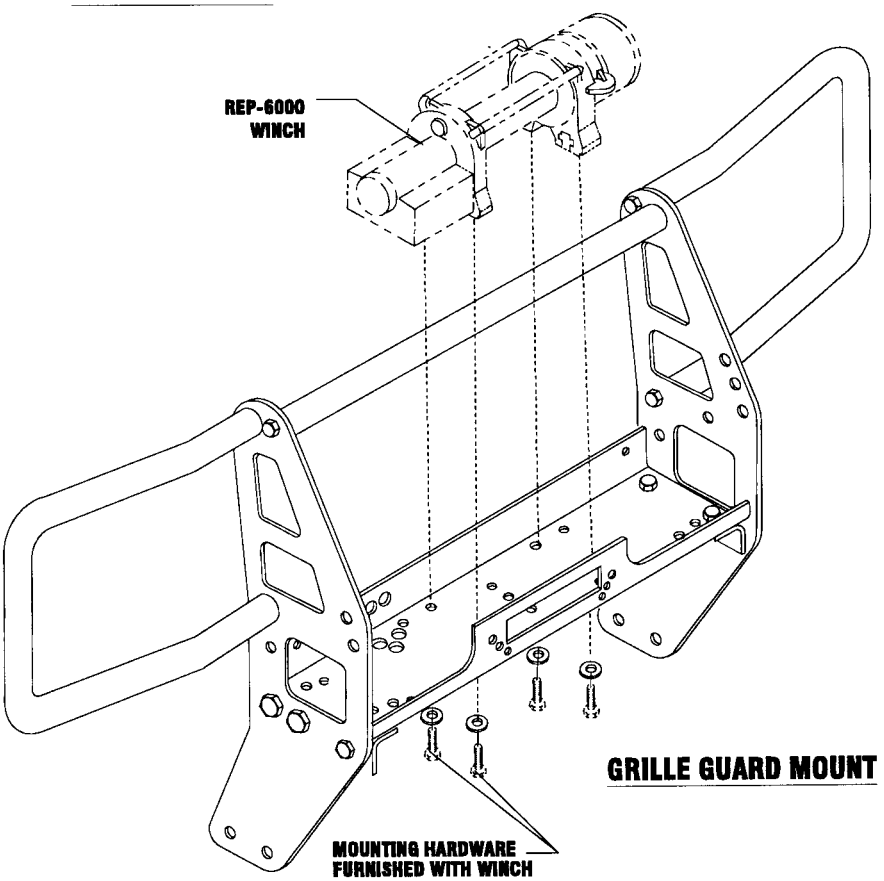


**GRILLE GUARD MOUNT**