INSTALLATION GUIDE

Installation Guide for the Extreme Short Shaft Kit

Part #004444400 (231ESS)

Tera Manufacturing, Inc.
5251 South Commerce Dr.
Murray, Utah 84107
Phone/801.288.2585
Fax/801.713.2313
www.teraflex.biz

The TeraLow 231ESS fits all Jeep Wranglers and XJ Cherokees with an electronic speedometer (not a cable) and a factory installed 231J Transfer case. Jeeps manufactured prior to 1992 will need to be equipped with an electronic speedometer (sold separately). This kit does not fit the Rubicon edition Wrangler transfer case. **Note: Some 1998 and older model Jeeps will have a different style 3 wire connector on the factory wiring harness. The connector on the new speed sensor will not plug in. You have 2 choices...hardwire the new speed sensor by cutting off the connectors and soldering onto the factory wires, or buy a new female connector from TeraFlex (available separately, TeraFlex part #5202308) and install it on the factory wiring harness. Then plug in the speed sensor that comes with the 231ESS kit.**

Proper calibration of the speedometer depends on changes to axle ratio and tire size. Certain combinations of tire size and axle ratio do not require calibration changes. Refer to the following chart to determine if calibration will be required. If your tire size and axle ratio combination fall in the gray shaded area, then you will not need to recalibrate. If it falls outside of the gray area, the percentage shows what your speedometer error will be (unless you use a converter box.) If your vehicle requires recalibration of the speedometer, a converter box is available from TeraFlex Part # BLD33002.

NOTE: *Because of the 3 pulses per revolution of the 231ESS, it is important that you use the chart below to figure out how much your speedometer reading could be off after installing the 231ESS.*

Axle Ratio	Tire Size 40"	37"	35"	33"	32"	31"	30"	29"	28"	27"
5.13	10%	9%	14%	19%	21%	23%	28%	28%	29%	31%
5.38	14%	13%	18%	22%	25%	27%	31%	32%	32%	34%
4.88			9%	14%	17%	20%	24%	25%	25%	27%
4.56				8%	11%	14%	19%	19%	20%	22%
4.11	-13%	-14%	-8%				10%	10%	11%	14%
3.73	-24%	-26%	-19%	-12%	-9%					
3.55	-31%	-32%	-25%	-18%	-14%	-11%				
3.07	-51%	-53%	-45%	-36%	-32%	-28%	-21%	-20%	-19%	-16%
Revs per mile from Tire Manufactures published data										
	575	569	601	638	658	679	718	724	730	752

Revised 19 June 06

Notes:

Your speedometer will work without the converter box, but if tire changes and ring and pinion ratio changes are made, the accuracy of the speedometer may be affected. It is important to have an accurate speedometer signal because the vehicle computer uses the input from the speedometer sensor to make decisions that impact vehicle efficiency. (And you might get a ticket!)

The TeraLow 231ESS requires the use of a 1310 CV rear driveshaft. Driveshafts are available for all stock Jeep applications and are sold separately by TeraFlex.

You will need a 12 point 10 mm socket to remove one of the bolts that hold the transfer case halves together. You will also need a good lock ring pliers set to remove the lock ring holding the shift hub on the original main shaft, and to install the hub on the new Extreme Short Shaft. Other tools required are common to most tool kits. Make sure you have a torque wrench and the correct socket for the output yokes. **The rear output yoke nut must be torqued to 180 ft. lbs.**

Installation:

Installing the 231ESS is basically the same as installing the original TeraLow 231SS. Read all of the instructions and look at the photos to familiarize yourself with the entire process before beginning installation.

This rear shaft conversion can be completed with the transfer case in the vehicle although it might be easier to remove the transfer case and complete the installation on a workbench. These photos show the work being done with the case still in the vehicle.

- Raise and securely support the vehicle.
- Support the transmission and remove the factory cross member/skid plate.
- Drain the transfer case fluid

There are a couple of different styles of output slip yoke and housing on 231J transfer cases. The photo to the left is typical.

Remove the rear driveshaft completely. Then remove the front driveshaft at the transfer case yoke, and position it out of the way so you can get to the front output yoke to remove it. Remove the nut and front output yoke.

Remove the dust shield or harmonic dampening ring from the factory output shaft and remove the seal in the factory output housing.

Using lock ring pliers remove the retaining ring that holds the output bearing in place on the factory output shaft.

Then remove the speedometer drive gear assembly, unplug the 3 wire connector, remove the bolts that secure the output housing to the transfer case, and remove the output housing

Next remove the bolts that hold the case halves together. There are different style fasteners used here so pay attention to which bolts go in which holes for reassembly.

On each end of the transfer case at the split line there are machined slots designed for using a screwdriver to pry the case halves apart. Make sure you have removed all the bolts, then use a flat blade screwdriver and gently separate the case halves. ***Make sure the output shaft stays in the front case half at this point. Be careful to not drop the oil pump as you lift off the rear case half.***

Next, carefully remove the output shaft, the front output gear and shaft, the drive chain and shift fork all together as an assembly and lay them on a clean workbench. Pay attention to the coil spring on the shift fork shaft. You will need to put it back on the shaft before assembling the back half of the transfer case.

Note: Verify the length of your mode fork shift rod as shown. If your shift rod measures 10.2″, it will need to be cut down to a length of 9.380″. This is typical of 1988 and 1989 model YJ's.

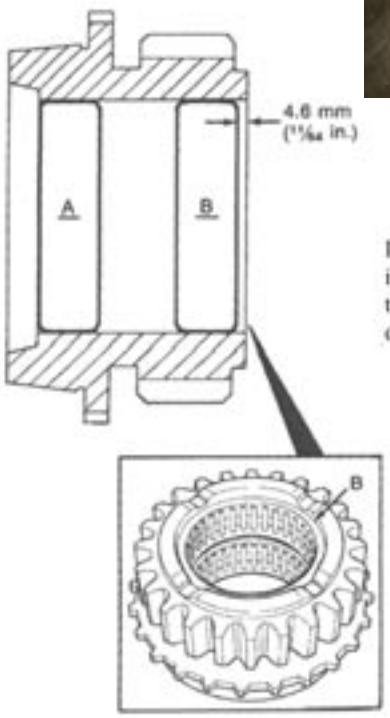

If necessary, remove bearings in the drive sprocket as indicated in the diagram to the left. The diagram to the left is the same part as **#26** on the exploded view of the 231J transfer case.

Notice the length difference between the stock output shaft and the new TeraLow Extreme Short Shaft. It is a significant change.

Lift the factory rear output shaft out of the drive chain. Remove the lock ring that holds the drive sprocket and hub onto the factory output shaft and slide them off and then onto the new Extreme Short Shaft.

Reinstall the lock ring, then place the new output shaft assembly back into the drive chain and prepare to reinstall the drive train back in the front case half by cleaning the case half mating surfaces

Carefully install the front and rear output shafts, drive chain and shift fork into the front case half. Reinstall the coil spring on the shift fork shaft.

Be sure you didn't get any grease or oil on the case half mating surfaces, then apply RTV silicone to the front case half. At this point make sure the magnet is placed securely in the slot of the front case half. Carefully install the oil pump on the outside of the rear case half and insert the pickup tube with o-ring.

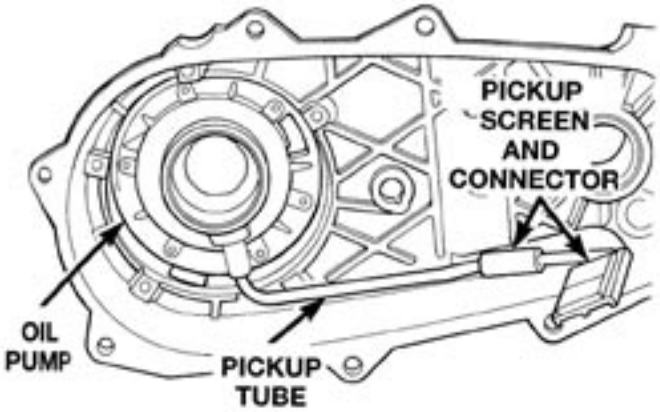

Slide the rear case half over the rear output shaft and rotate the oil pump as needed to engage the splines. Slide the rear case half all the way onto the locating dowels and put in 1 bolt to hold everything in place.

Now check to make sure the oil pump pickup tube didn't fall out of place. Install the remaining bolts that hold the case halves together and torque to 30 ft lbs.

Slide the speed sensor ring onto the Extreme Short Shaft with the taller shoulder facing the threaded end of the shaft.

The bearing, snap ring and oil seal should be already installed in the new rear output housing when you receive it from your TeraFlex dealer. Clean the mating surface on the transfer case and apply RTV sealant. Install the new rear output housing and retaining bolts.

If the output housing won't go up against the transfer case half then check to make sure the speed sensor ring is not installed backwards. You will notice a bevel on the outer diameter of the speed sensor ring that must match the slope of the casting and must line up square with the sensor so there is a minimum air gap between the sensor and the ring. **NOTE:** *Refer to the section view drawing for proper installation of the tone ring.*
Next put some grease on the seal surface and install the output yoke with the new nut. **NOTE:** *Install the four driveshaft bolts first.* Tighten the yoke nut to 180 ft. lbs.

Install the speed sensor in the hole of the new tail housing. Use a little oil on the o-ring to ease installation. Install the retaining bolt and carefully tighten it to secure the sensor. No more than 7 ft. lbs. to avoid damaging the sensor.

Plug in the 3-wire connector into the factory harness connector.

Install the rear driveshaft using the supplied 5/16-12 point bolts. We tried it with standard hex head bolts and learned that you cannot get a ½" wrench on the bolt head.

Reinstall the drain plug and fill the transfer case with the recommended oil.

Reinstall the front driveshaft.

Reinstall the skid plate/cross member assembly and lower the vehicle to the ground.

Enjoy your new longer rear driveshaft.

Wiring to work with older Jeeps such as 1997-98 TJ Wrangler:

In order to use the TeraFlex 231ESS in Wranglers and YJs built prior to 1999 it may be necessary to change the connector on the end of the factory chassis wiring harness. This will allow you to plug the speed sensor included with the TeraLow 231ESS directly into the vehicle wiring harness.

This wiring diagram shows the color code and location of the wires that will be changed.

Cut the plug off the vehicle side of the wiring harness right at the connector leaving you with 3 wires. TeraFlex can sell you the new female connector **(TeraFlex Part Number 5202308)** to go onto the factory wiring harness. Trim back the insulation and hook the wires up as shown in the diagram. The Violet/Orange wire is the 5V supply and hooks to the Brown wire on the new TeraFlex plug. The Brown/Yellow wire is the sensor ground and hooks to the Blue center wire on the new TeraFlex plug. The White/Orange wire carries the speed signal back to the computer and hooks to the black wire on the new TeraFlex plug. Solder all connections and cover with heat shrink tubing and electrical tape to protect the wiring.

FEMALE SPEED SENSOR PLUG
TERA PART# BLD5202308.
THIS IS THE VEHICLE SIDE THAT THE 231ESS SENSOR PLUGS INTO. THIS IS THE SAME FACTORY PLUG THAT IS FOUND ON NEWER JEEPS.

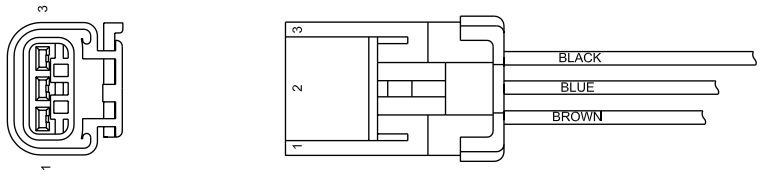

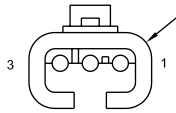

PLEASE SEE THE CHARTS BELOW FOR A GUIDE IF YOUR FACTORY SPEEDOMETER PLUG DOES NOT MATCH THE NEW 231ESS SENSOR PLUG. YOU CAN CUT OFF THE FACTORY FEMALE PLUG AND SPLICE IN A NEW STYLE FEMALE PLUG THAT YOU MAY PURCHASE FROM TERAFLEX, PART# BLD5205308. USE THIS INFORMATION ONLY AS A GUIDE AS IT IS CORRECT TO THE BEST OF OUR KNOWLEDGE, BUT WE CANNOT VERIFY THE CONSISTENCY ON ALL WRANGLERS.
PLEASE NOTE OUR SENOR IS RATED 5-24 VDC. ON OLDER JEEPS WITH AFTERMARKET GAGES YOU DO NOT NEED TO STEP DOWN THE VOLTAGE TO 5VDC.

1997 TJ
VEHICLE SPEED SENSOR PLUG

CAV	WIRE COLOR ON NEW 231ESS SENSOR	CONNECT TO FACTORY WIRE COLOR	WIRE FUNCTION
1	BROWN	VT/OR	5V SUPPLY
2	BLUE	BR/YL	SENSOR GROUND 1
3	BLACK	WT/OR	VEHICLE SPEED SENSOR SIGNAL

1993–1995 YJ
VEHICLE SPEED SENSOR PLUG

CAV	CONNECTS TO WIRE COLOR ON NEW 231ESS PLUG	EXISTING FACTORY WIRE COLOR	WIRE FUNCTION
1	BROWN	OR	5V SUPPLY
2	BLUE	BK/LB	SENSOR GROUND 1
3	BLACK	WT/OR	VEHICLE SPEED SENSOR SIGNAL

1992 YJ
VEHICLE SPEED SENSOR PLUG

CAV	CONNECTS TO WIRE COLOR ON NEW 231ESS PLUG	EXISTING FACTORY WIRE COLOR	WIRE FUNCTION
1	BROWN	WT/BK	5V SUPPLY
2	BLUE	BR/RD	SENSOR GROUND 1
3	BLACK	BL	VEHICLE SPEED SENSOR SIGNAL

REVISIONS

ZONE	REV	DESCRIPTION	DATE	APPROVED
	B	CHANGED PART NUMBER FOR SENSOR ASSEMBLY	11 NOV 2005	BAC
	C	ADDED INFORMATION ON YJ VEHICLES	15 JUN 2006	BAC
	D	ADDED THAT SENSOR IS RATED FOR 5–24VDC	28 AUG 2007	BAC

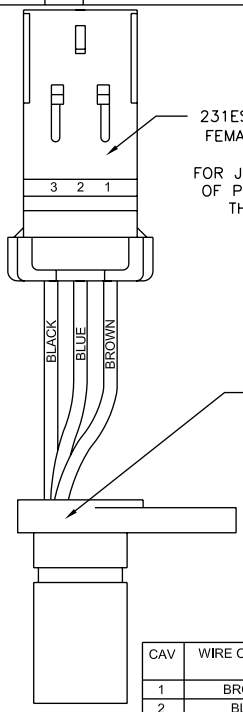

231ESS MALE PLUG MATES TO FACTORY FEMALE PLUG ON JEEPS (1999–2005) (AND SOME 1998 VEHICLES)
FOR JEEPS THAT HAVE THE OLDER STYLE OF PLUG, PLEASE SEE THE CHARTS ON THE LEFT SIDE OF THIS DRAWING

TERA PART# BLDGS5400
COMPLETE SPEED SENSOR ASSEMBLY

CAV	WIRE COLOR	WIRE FUNCTION
1	BROWN	5-24 VDC SUPPLY
2	BLUE	SENSOR GROUND 1
3	BLACK	VEHICLE SPEED SENSOR SIGNAL

DRAWN BY: B.CALVIN
DATE DRAWN 09 APR 2005

TOLERANCE UNLESS OTHERWISE SPECIFIED (FOR INCH DIMENSIONS)
FRACTIONAL ±1/32
DECIMAL .X ±0.03, .XX ±0.015, .XXX ±0.005
ANGLES ±2°

TERA MANUFACTURING
00231ESS EXTREME SS
SENSOR AND CONNECTOR PIN–OUTS

SIZE	ACAD NO.	DWG NO.	REV
A	BLD231ESS–WIRING	BLD231ESS–WIRING	D

SCALE NTS
SHEET 1 OF 1

Revised 19 June 06

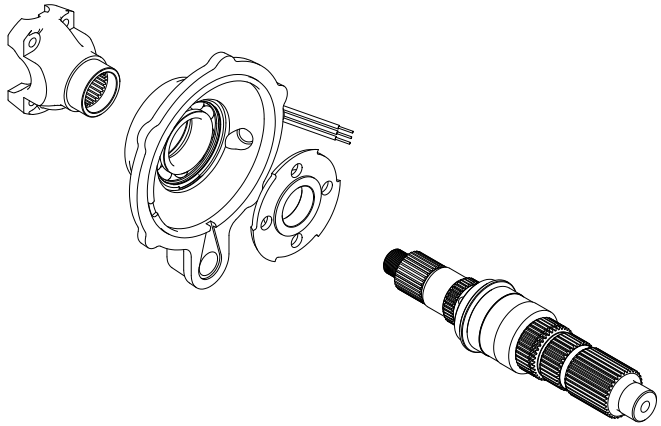

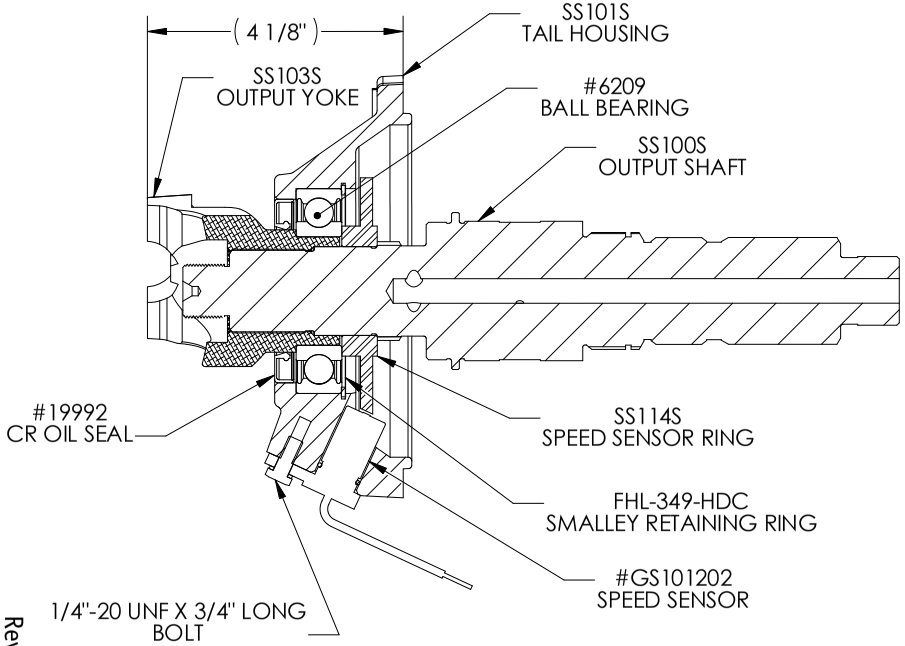

SECTION B-B

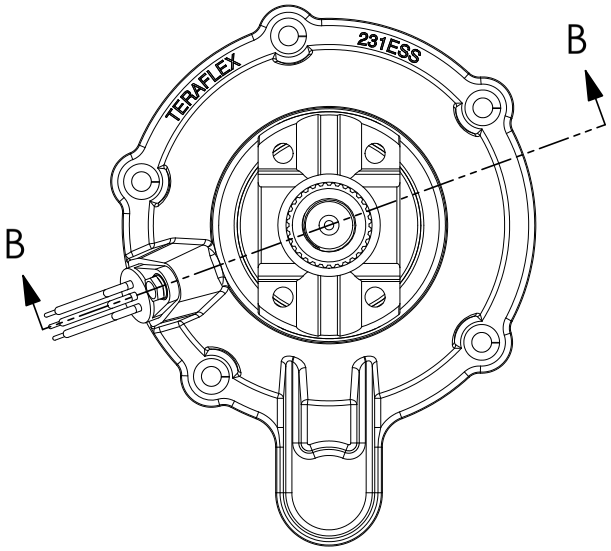

Revised 19 June 06

UNLESS OTHERWISE SPECIFIED:		NAME	DATE
DIMENSIONS ARE IN INCHES TOLERANCES: FRACTIONAL ±1/32 ANGULAR: MACH ±1 BEND ±2 TWO PLACE DECIMAL ±0.015 THREE PLACE DECIMAL ±0.005	DRAWN	B.CALVIN	27 AUG 2004
	CHECKED		
INTERPRET GEOMETRIC TOLERANCING PER:	COMMENTS:		
MATERIAL –			
FINISH –			
DO NOT SCALE DRAWING			

TERA MANUFACTURING
5251 COMMERCE DR
MURRAY, UTAH 84107

TITLE:
231ESS
EXTREME SHORT SHAFT
ASSEMBLY VIEWS

SIZE	DWG. NO.	REV
B	TL231ESS	A

SCALE: 1:1 | WEIGHT: | SHEET 1 OF 1


* These parts come pre-assembled.
SS101S
* Tail housing
SS100S
Output shaft
#WH-334
*Retaining ring &
#19992
*CR Oil seal
SS103S
Output yoke
SS114S
Speed sensor ring
5/16 UNF 12-point bolts
1/4"-20 UNF X 3/4" bolt
#6209
*Ball Bearing
SS112
Yoke Nut
#GS101202
Speed sensor

Exploded View of the 231J Transfer Case

◯ **Included in the Tera Low231 Heavy Duty Short Shaft kit**

Note: This diagram shows the Tera Low231 Heavy Duty Short Shaft kit, Tera Low231 4.0:1 case, and the Tera Low2WD kit. A stock setup will appear different than pictured.

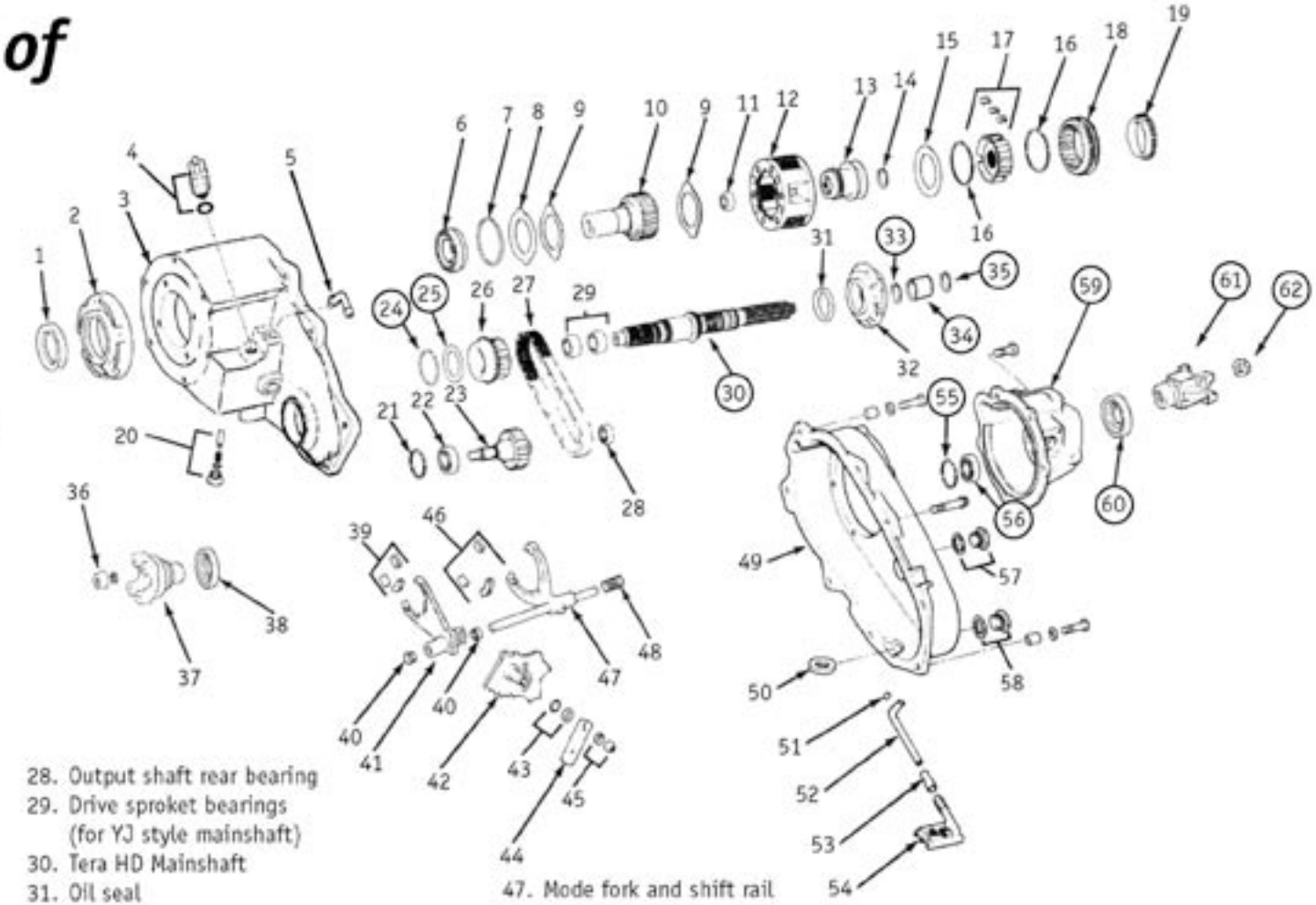

1. Front input seal
2. Front bearing retainer and seal
3. Tera HD Low231 case
4. Vacuum switch and seal
5. Vent assembly
6. Input gear bearing and snap ring
7. Low-range gear snap ring
8. Input gear retainer
9. Low-range gear thrust washer
10. Input gear
11. Input gear pilot bearing
12. Planetary gear assembly
13. Range fork shift hub
14. Synchro hub snap ring
15. Shim
16. Synchro hub springs
17. Synchro hub and inserts
18. Synchro sleeve
19. Stop ring
20. Shift detent plug, spring, and pin
21. Snap ring
22. Front output shaft bearing
23. Front output shaft
24. Large snap ring
25. Shim
26. Drive sprocket
27. Drive chain
28. Output shaft rear bearing
29. Drive sproket bearings (for YJ style mainshaft)
30. Tera HD Mainshaft
31. Oil seal
32. Oil pump assembly
33. Snap ring
34. Speedometer drive gear
35. Snap ring
36. Front yoke nut
37. Front yoke
38. Front output seal
39. Range fork inserts
40. Range fork bushings
41. Range fork
42. Sector
43. O-ring and seal
44. Range lever
45. Range lever nut and washer
46. Mode fork inserts
47. Mode fork and shift rail
48. Mode spring
49. Rear case
50. Magnet
51. Pickup tube oil ring
52. Mode fork inserts
53. Tube connector
54. Oil pickup screen
55. Snap ring
56. Rear bearing
57. Fill plug and gasket
58. Drain plug and gasket
59. Rear housing
60. Rear output seal
61. Rear yoke
62. Rear yoke nut

Figure 3

Tera Manufacturing, Inc.
5247 South Commerce Dr.
Murray, Utah 84107
Phone/801.288.2585
Fax/801.713.2313
www.teraflex.biz