INSTALLING YOUR SPARE TIRE CARRIER (JP54-017)

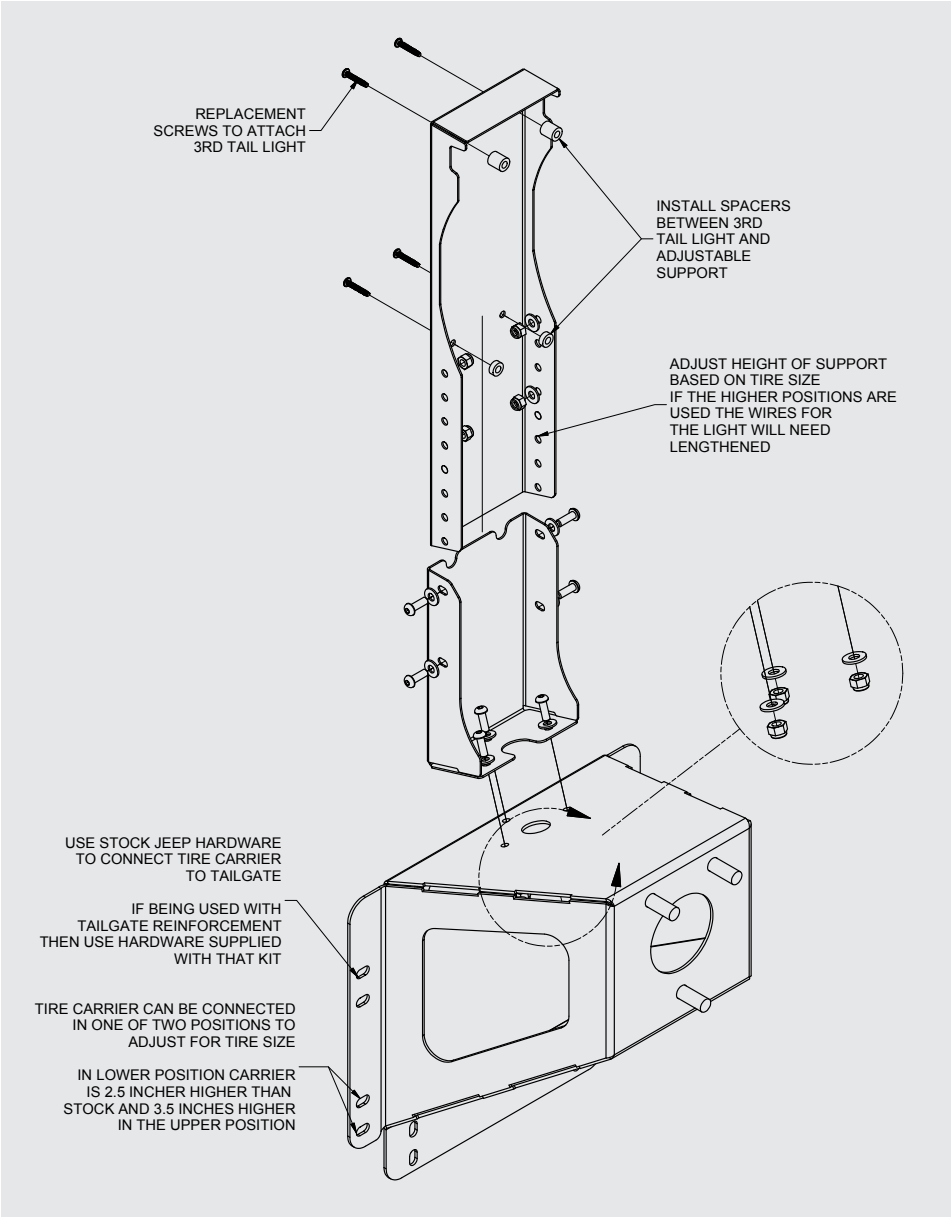

1. Remove stock spare tire carrier.
2. Remove 3rd tail light from stock carrier.
3. Attach lower portion of adjustable light support to the top of the tire carrier with provided hardware.
4. Bolt carrier to tailgate using stock Jeep hardware. If using with tailgate reinforcement then use the hardware provided with that kit.
5. Attach upper portion of light support to the lower portion. Select a position that will allow the light to be seen over the top of spare. Max tire size of 40".
6. Route the wires for the light through the hole in the top of the carrier. Depending on the adjusted location of the light support the wires for the light may need to be lengthened.
7. Attach 3rd tail light assembly to upper portion of adjustable light support using provided screws and spacers.